Date	SYM	REVISION RECORD	AUTH	DR.	CK.
5/06/06	A	Added "ROHS COMPLIANT"	T.B.	B.S.	
08/28/14	B	UPDATED TO ROHS 2 COMPLIANT	T.B.	B.S.	
02/17/17	C	DIM. 97.00 WAS 96.77 UPDATED NOTES	T.B.	B.S.	

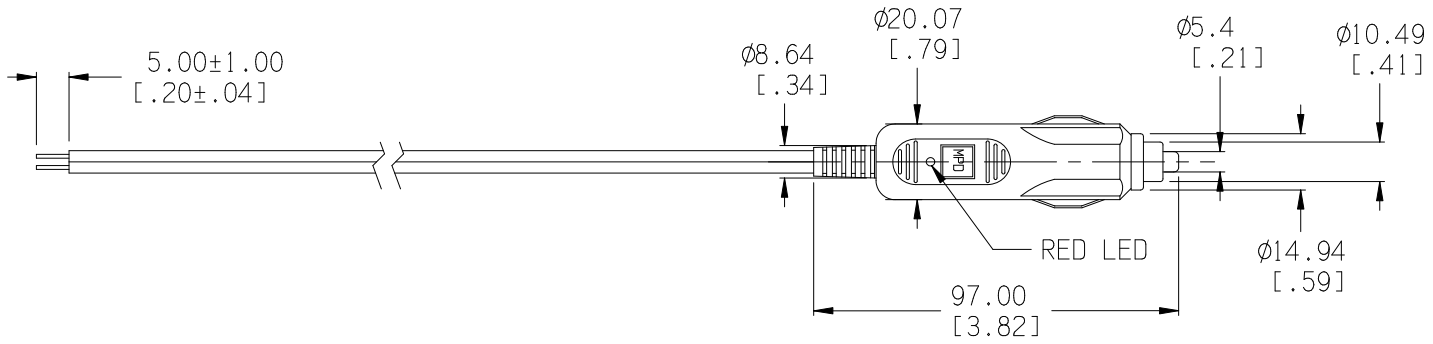

ROHS 2 COMPLIANT

RATED FOR 5 AMPS. CONTINUOUS DUTY FOR 18 HRS

BILL OF MATERIAL

PART #	QTY.	DESCRIPTION
APP-001	1	CIGARETTE PLUG FOR 21 OR 22.2mm DIA. SOCKETS
FUSE	1	3AG (6.35 x 30mm), 5 AMP.
CORD	1	SPT-1, 18 AWG, 105°C, UL-VW-1

CIGARETTE PLUG HOUSING: HIGH IMPACT ABS
FLAMMABILITY RATED: UL94-HB, FILE NO. E56070
H.D.T. IS 85°C

Tolerance (Inches)
Decimal ±.5 (.020)
Fractional ± .8 (.030)
Angular ± 3°

MPD Memory Protection Devices, Inc
200 Broad Hollow Road, Farmingdale, New York 11735

Scale
Drawn By B.S.
Approved By T.B.

Title
6' AUTO POWER CORD SET WITH SOLDER LEADS

Date 02/17/17

Drawing Number ZA5073-B